133-8.3STP-JA6

Floor Standing Bath Set with Hand Shower and Shut-Off Valves
Does not use concealed rough
Hand Shower Flow Rate: 1.75 GPM
Note: Some building codes may require remote pressure balance valves for anti-scald

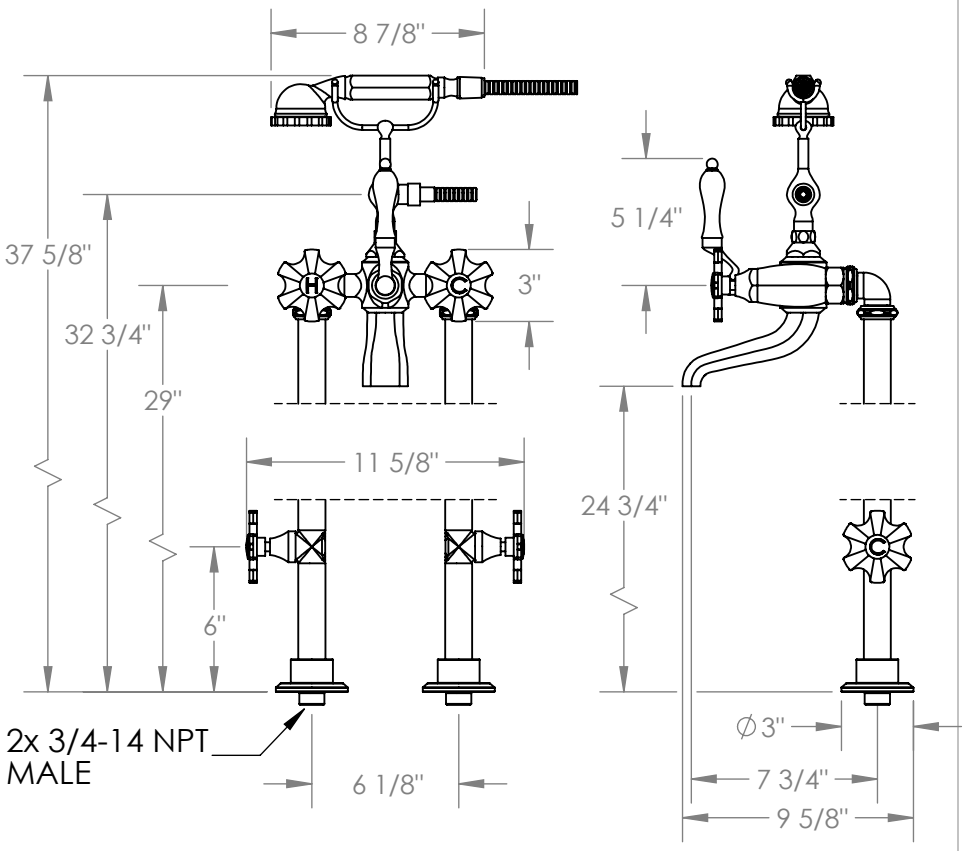

Meets the applicable requirements of ASME A112.18.1-2005/CSA B125.1-05, entitled “Plumbing Supply Fittings”

350 Dewitt Ave Brooklyn NY 11207 USA T 718 257 2800 F 718 257 2144 info@watermark-designs.com