Olympia Faucets
VALUE FOR BUILDERS

P-3250
Accent Series

Three Handle Tub/Shower Set

- Lever Handles
- 1/2” IPS Female Inlets
- Washerless Cartridge Operation
- Single Function 2-1/4” Standard Showerhead, Arm & Flange
- 1/2” IPS Tub Spout
- With 1.5 GPM Flow Rate
- 8” Cast Brass Valve body Included

Code and Standards

- ADA: Compliance to ICC/ANSI A117.1 (Lever Handle Only)
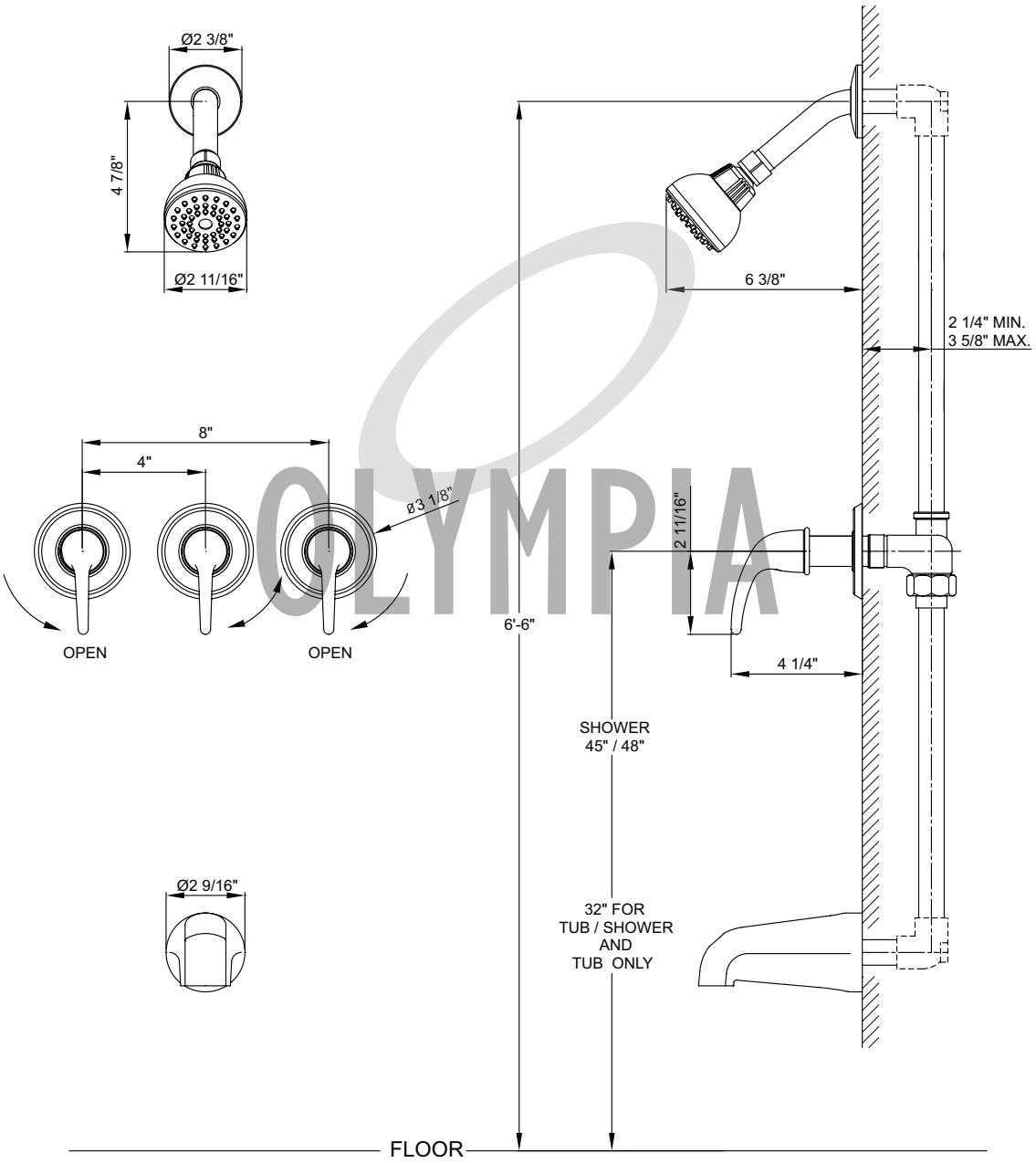
*For other finishes and flow rates offered, please visit our website, email an inquiry to sales@pioneerind.com or contact our sales at 800-338-9468