SPECIFICATION SHEET

OLYMPIA

i2 SINGLE HANDLE LAVATORY FAUCET

Model #: _____

Specific Features: _____

Project Name: _____

Submitted For: _____

Date: _____

- Lever Handle
- 4-3/4" Reach, 2-7/8" From Deck to Aerator
- Ceramic Disc Cartridge
- 1 Or 3-Hole 4" Installation
- 50/50 Pop-Up Drain Assembly
- Easy-Install 18" Flex Supply Lines With 3/8" Connections
- Deck Cover Plate Included
- With 1.2 GPM Flow Rate

L-6050-WD
SHOWN

ADA

Model #	Features	Finish	
L-6050-WD*		CP	
L-6050-WD-BN*		PVD BN	

* Aerator limited to 1.2 GPM Flow Rate
* E0.5 - 0.5 GPM Flow Rate Aerator Available upon request

Olympia products are engineered and manufactured to meet the following standards and codes:

ASME A112.18.1
ANSI A117.1
IAPMO LISTED/ CUPC Listed-Cal Green Compliant
ANSI / NSF 61, SECTION 9
CONTAINS NO MORE THAN 0.25% WEIGHTED AVERAGE LEAD CONTENT

WaterSense Meets EPA Criteria
Certified by IAPMO R&T

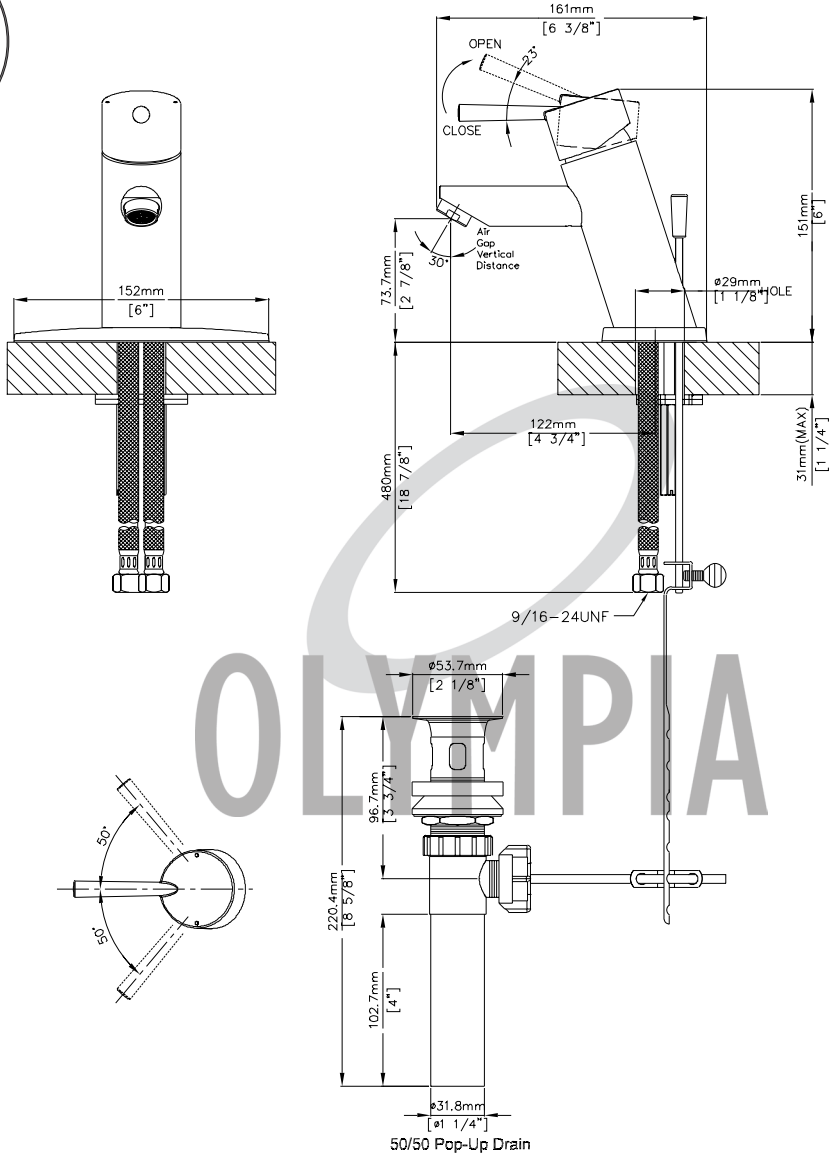

Commerce, CA
www.olympiafaucets.com
Olympia Faucets, Inc. © 2017
A Pioneer Industries Inc. Brand
DMSPL-6050-WD/REV. 11.17