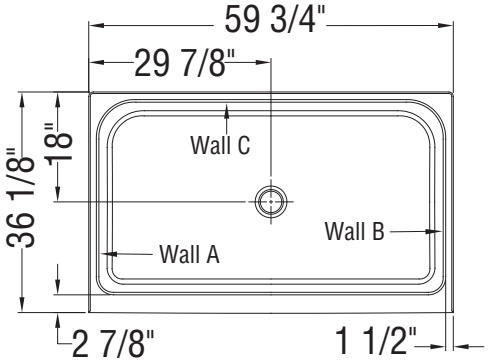

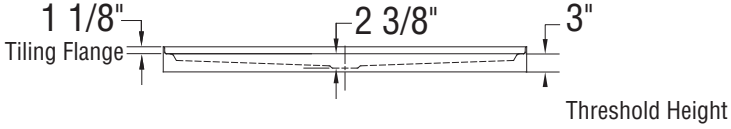

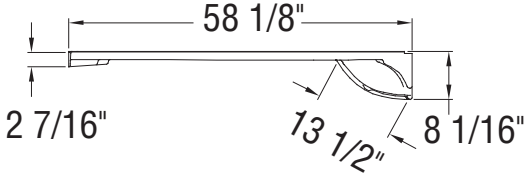

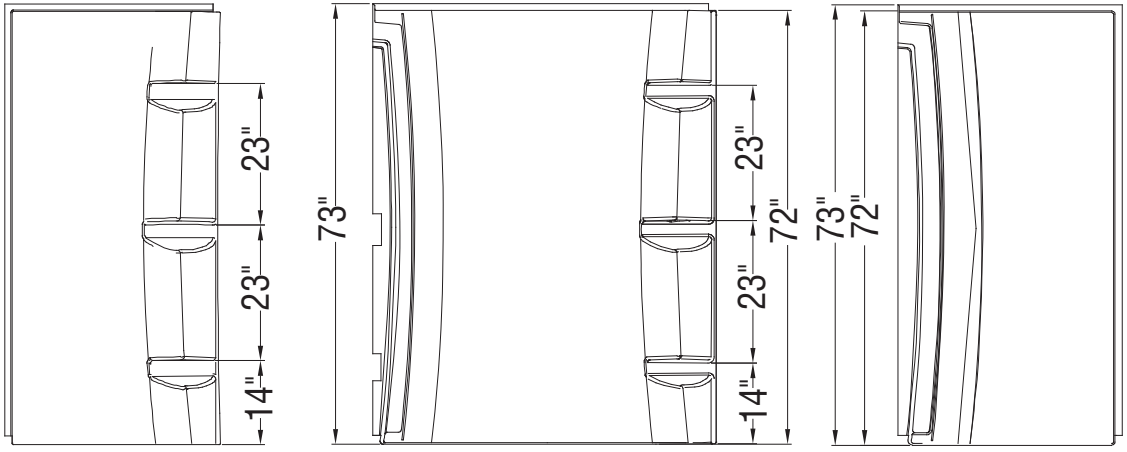

Wall A **Wall C** **Wall B**

All dimensions are approximate. Structure measurements must be verified against the unit to ensure proper fit.